SPEC SHEET

Goodman Small Hanging Light

Item # TOB 5090HAB-AW

Designer: Thomas O'Brien

O/A Height: 40.25"

Fixture Height: 14.25"

Min. Custom Height: 18.5"

Width: 15"

Canopy: 5" Round

Finishes: AN, BZ, BZ/HAB, HAB

Shade Treatments: AN, ASH, AW, BZ, HAB, L, NAB, TST

Shade Details: 4.75" x 15" x 12.75"

Socket: E26 Keyless

Wattage: 100 A19

Weight: 9 Pounds

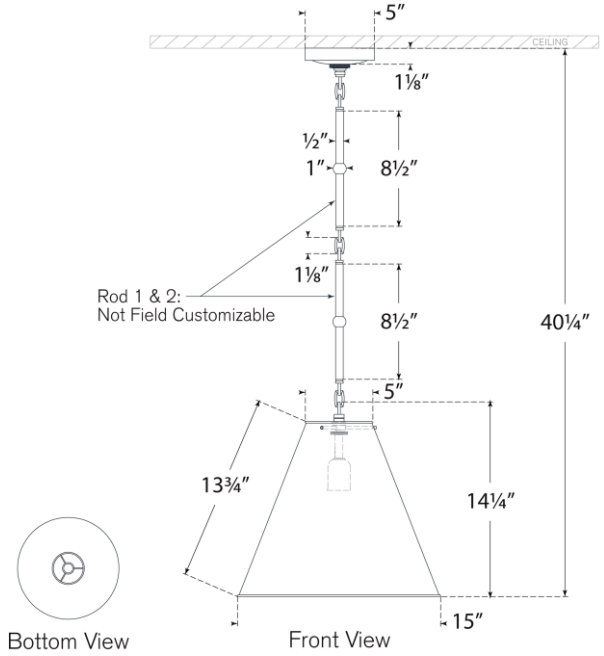

VISUAL COMFORT & CO.